HVAC DISCONNECT SWITCH

HQParts
"Highest Quality Parts"

Enclosure	Fused/Non-Fused	RATINGS	HORSEPOWER RATINGS
NEMA 3R (outdoor) Metallic	60A Non-Fused	240 Vac, 60 Amp, Single Phase, 2-pole, 3-wire	Standard Horsepower Rating 3HP Maximum Horsepower Rating 10HP

TERMINAL TORQUE
CONNECTOR TORQUE (AL - CU WIRE)

LINE / LOAD				GROUND		
WIRE SIZE (AWG)	14 -10	8 - 6	4 - 2	WIRE SIZE (AWG)	14 -10	8
TORQUE (LB - IN)	35	45	50	TORQUE (LB - IN)	25	40

Applications:
Air conditioners
Heat pumps
Water heaters
Other locations where a local disconnect is required

Left Side View

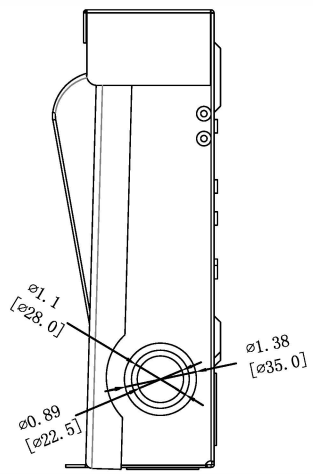

Front View (Inside)

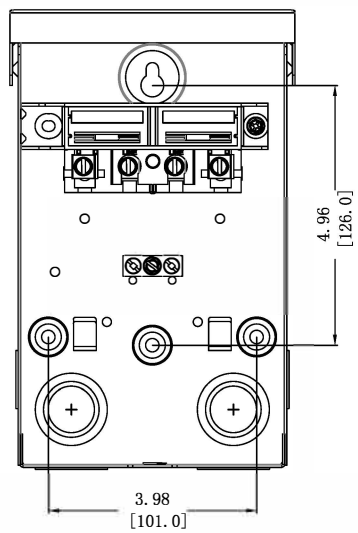

Right Side View

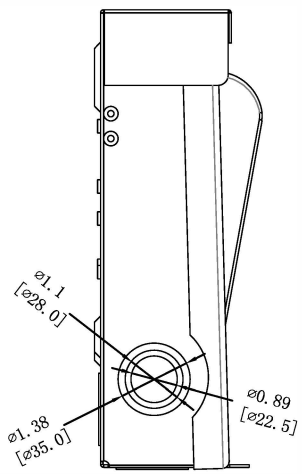

Front Cover

Front Cover

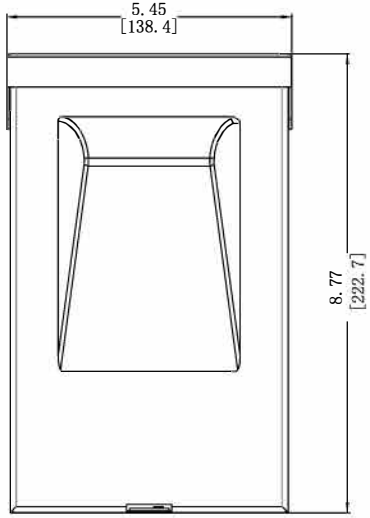

Bottom View

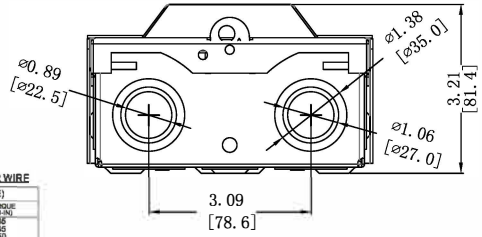

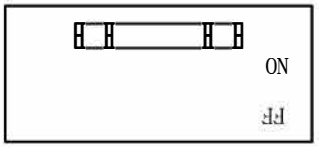

FRONT SIDE

USE 60/75°C ALUMINUM OR COPPER WIRE

LUG SPECIFICATIONS (AL-CU WIRE)

	WIRE SIZE (AWG)	TORQUE (LB-IN)
LINE/LOAD TERMINALS	14-10	35
	8-6	45
	4-2	50
EQUIPMENT GROUND TERMINAL	14-10	25
	8	40

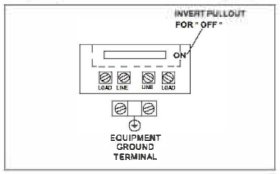

REVERSE SIDE

Dwn By:	Date: 04/01/2023
Chk By:	Part No. HQ60ANF